CITY DETAILS

UD-01b

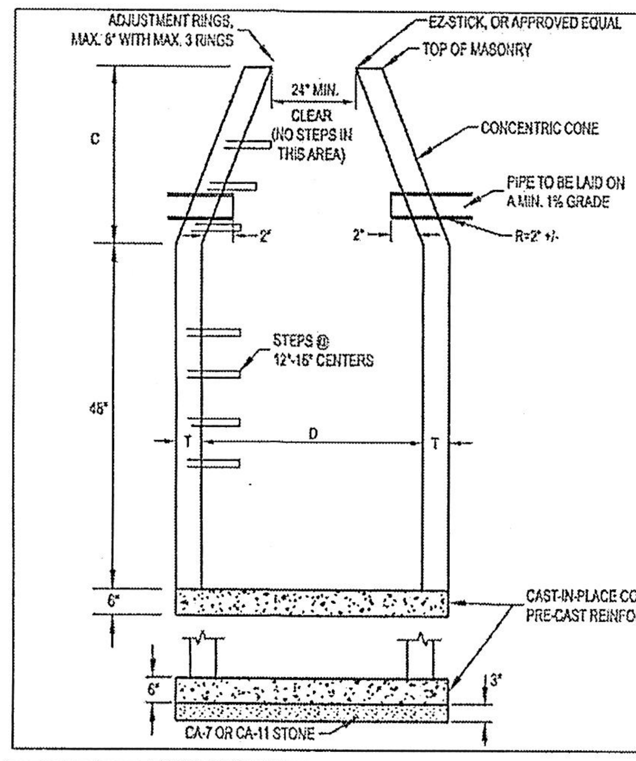

NOTES:

1. ALL CATCH BASINS SHALL BE 4'-0" IN DIAMETER UNLESS OTHERWISE NOTED ON THE PLANS.
2. IN ADDITION TO THE REQUIREMENTS OF ART. 602.15 OF THE STANDARD SPECIFICATIONS THE CONTRACT UNIT PRICE FOR CATCH BASINS, TYPE A SHALL INCLUDE THE CA-7 OR 11 CUSHION WHEN REQUIRED. FURNISHING AND COMPACTING THE SPECIFIED BACKFILL MATERIAL.
3. DIMENSION "C" FOR PRECAST REINFORCED CONCRETE SECTIONS MAY VARY FROM THE DIMENSION GIVEN TO PLUS 6 INCHES.

CASTING SCHEDULE		
LOCATION	EJIW	NEENAH
B or M 6.12 C&G	7235 M2	R3502-A
DEPRESSED CURB	7210 M3	R-2511
PAVED	1920	R-1713
NON-PAVED	1020	R-2535

ALTERNATE MATERIALS FOR WALLS	D	C	T
PRE CAST REINFORCED CONCRETE SECTIONS	4'-0"	2'-6"	4"
	5'-0"	3'-9"	5"
CAST-IN-PLACE CONCRETE	4'-0"	2'-6"	6"
	5'-0"	3'-9"	6"

Approved: City Engineer
Victor C. Ramirez, P.E.
Director of Engineering and Building

Drawing Name: CATCH BASIN, TYPE A

Drawing Number: UD-01b
Date: 4/15/2007
Drawn: EM Checked: LZ

CRYSTAL LAKE ILLINOIS Engineering Division

L:\ENGINEERING AND BUILDING\ENGINEERING\DETAILS AND STANDARDS\

UD-02a

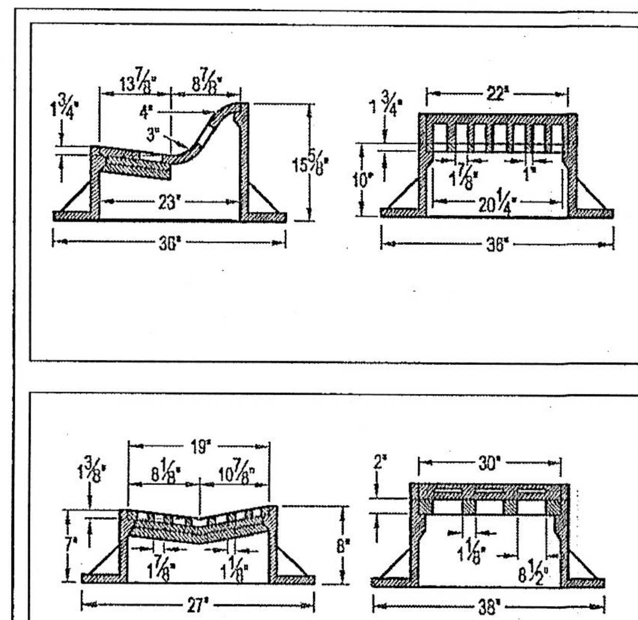

CITY REQUIREMENTS

1. BARRIER CURB: USE NEENAH R-3502-A; EJIW 7210 / TYPE M1 GRATE; OR APPROVED EQUAL
2. MOUNTABLE CURB OR DRIVEWAYS: USE NEENAH R-3511; EJIW 7210 / TYPE M3 GRATE; OR APPROVED EQUAL
3. CONCRETE MUST BE POURED A MINIMUM OF 6" AROUND THE CIRCUMFERENCE OF THE FRAME AND AT LEAST 6" BELOW THE FRAME TO ENSURE THAT THERE WILL BE NO INFILTRATION BETWEEN THE FRAME AND STRUCTURE.

Approved: City Engineer
Victor C. Ramirez, P.E.
Director of Engineering and Building

Drawing Name: CURB INLET FRAME AND GRATE

Drawing Number: UD-02a
Date: 4/15/2007
Drawn: EM Checked: TH

CRYSTAL LAKE ILLINOIS Engineering Division

L:\ENGINEERING AND BUILDING\ENGINEERING\DETAILS AND STANDARDS\

UD-02d

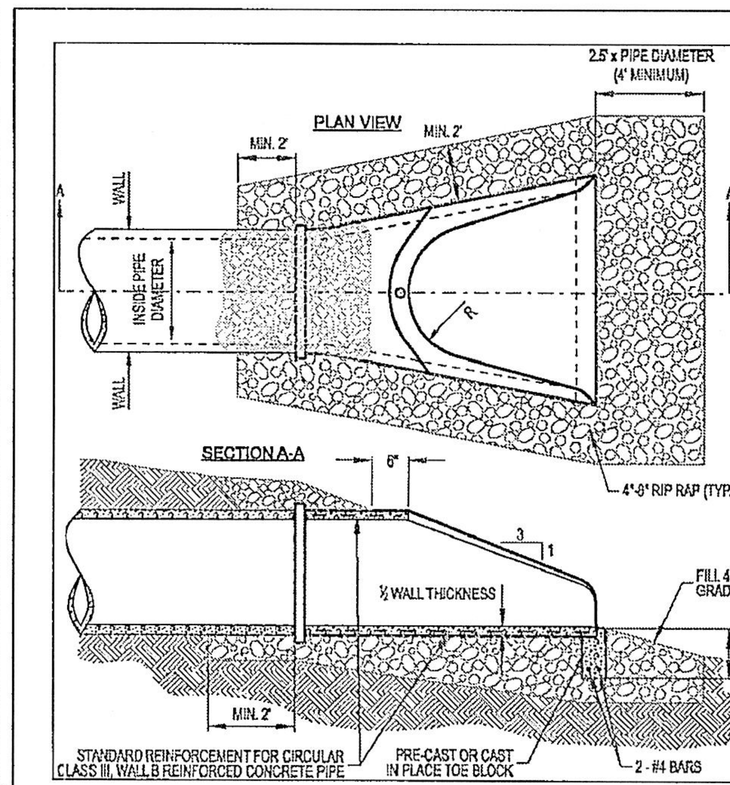

NOTES:

1. CONCRETE FLARED END SECTIONS SHOULD BE CONSIDERED FOR USE WITH CONCRETE PIPE CULVERTS HAVING SKEWS NO GREATER THAN 15 DEGREES.
2. PRECAST CONCRETE FLARED END SECTIONS SHALL CONFORM TO THE APPLICABLE REQUIREMENTS OF AASHTO M-170 CLASS III, WALL B REINFORCED CONCRETE PIPE.
3. PRECAST CONCRETE FLARED END SECTION FOR PIPE DIAMETER REQUIRED SHALL BE AS INDICATED ON DETAIL PLAN FOR EACH INDIVIDUAL INSTALLATION.
4. THE END BLOCK SHALL BE PLACED PRIOR TO THE INSTALLATION OF THE FLARED END SECTION. THE END BLOCK SHALL BE BACKFILLED IN ACCORDANCE WITH ART. 502.10 OF THE STANDARD SPECIFICATIONS. THIS COST SHALL BE INCIDENTAL TO EACH END SECTION.
5. RIP RAP SHALL CONFORM TO SECT. 281 OF THE STANDARD SPECIFICATIONS EXCEPT ONLY 4"-8" STONE WILL BE ALLOWED. INSTALL FABRIC UNDER STONE.
6. STANDARD IDOT GALVANIZED GRATE REQUIRED FOR 15" DIAMETER AND LARGER.

Approved: City Engineer
Victor C. Ramirez, P.E.
Director of Engineering and Building

Drawing Name: FLARED END SECTION (PRECAST CONCRETE PIPE)

Drawing Number: UD-02d
Date: 4/15/2007
Drawn: EM Checked: LZ

CRYSTAL LAKE ILLINOIS Engineering Division

L:\ENGINEERING AND BUILDING\ENGINEERING\DETAILS AND STANDARDS\

UD-01a

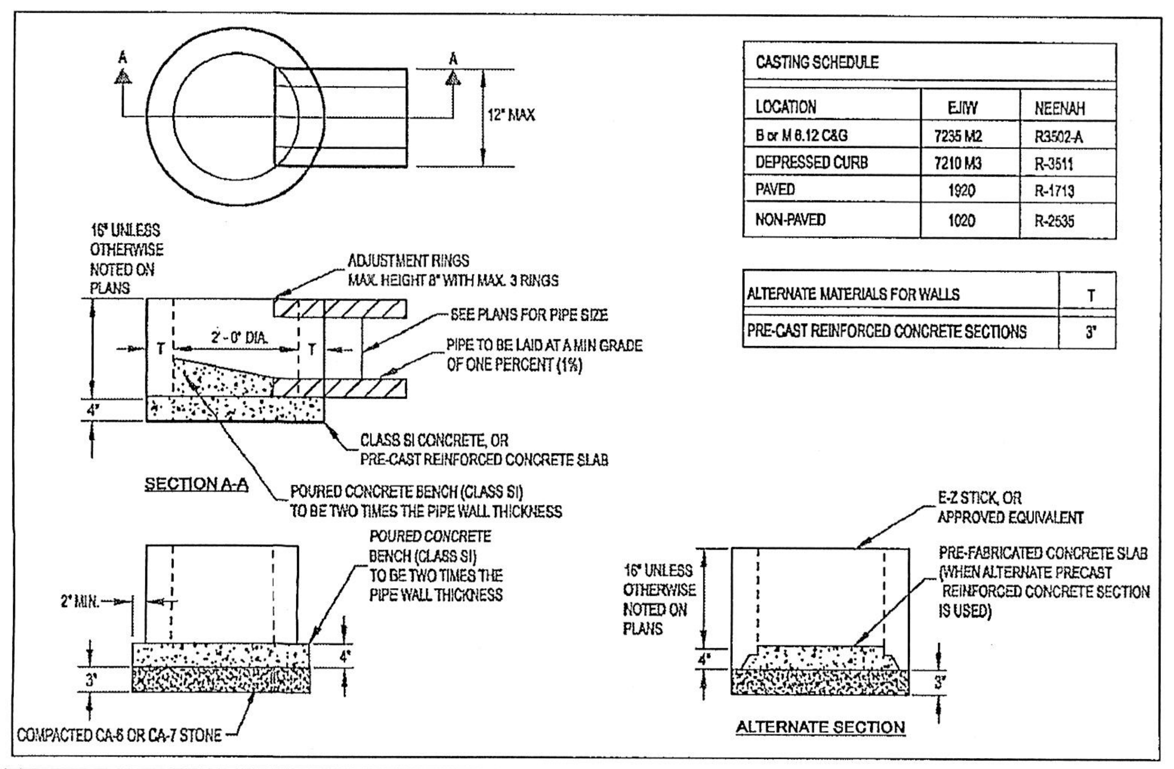

CASTING SCHEDULE		
LOCATION	EJIW	NEENAH
B or M 6.12 C&G	7235 M2	R3502-A
DEPRESSED CURB	7210 M3	R-3511
PAVED	1920	R-1713
NON-PAVED	1020	R-2535

ALTERNATE MATERIALS FOR WALLS	T
PRE-CAST REINFORCED CONCRETE SECTIONS	3"

Approved: City Engineer
Victor C. Ramirez, P.E.
Director of Engineering and Building

Drawing Name: DRAINAGE STRUCTURES: INLET, TYPE A

Drawing Number: UD-01a
Date: 4/15/2007
Drawn: EM Checked: LZ

CRYSTAL LAKE ILLINOIS Engineering Division

L:\ENGINEERING AND BUILDING\ENGINEERING\DETAILS AND STANDARDS\

UD-01d

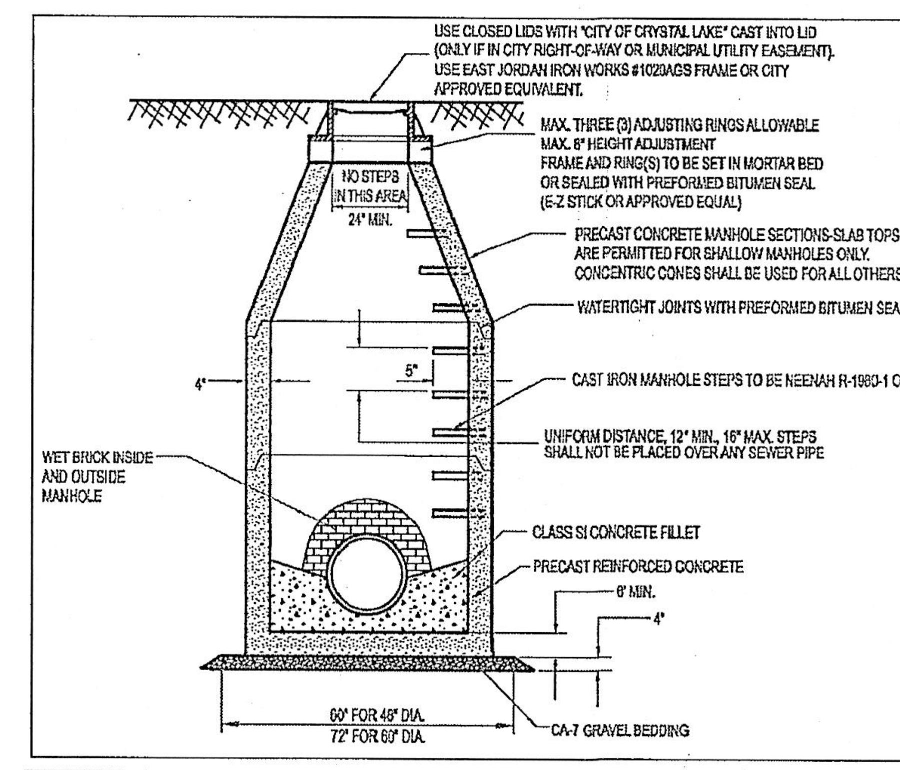

CASTING SCHEDULE		
LOCATION	EJIW	NEENAH
B or M-6.12	7235 M2	R3502-A
DEPR. CURB	7210 M3	R-2511
PAVED	1920	R-1713
NON-PAVED	1020	R-2535

PIPE SIZE	d
10" - 24"	48"
27" - 48"	60"
54" - 72"	SPECIAL

Approved: City Engineer
Victor C. Ramirez, P.E.
Director of Engineering and Building

Drawing Name: STORM MANHOLE TYPE A

Drawing Number: UD-01d
Date: 4/15/2007
Drawn: EM Checked: LZ

CRYSTAL LAKE ILLINOIS Engineering Division

L:\ENGINEERING AND BUILDING\ENGINEERING\DETAILS AND STANDARDS\

UG-03

1. TRENCH BACKFILL TO SUBGRADE AND WITHIN 2 FEET OF PROPOSED PAVEMENT, DRIVEWAY, CURB AND GUTTER OR SIDEWALK. TRENCH BACKFILL MATERIALS SHALL BE IDOT APPROVED GRADATION CA-6, GRADE 7, 8, OR 9 COMPACTED TO 90% OF MODIFIED PROCTOR DENSITY. IN NON-STRUCTURAL AREAS BACKFILL WITH APPROVED EXCAVATED MATERIALS.
2. INITIAL BACKFILL TO DEPTH AS INDICATED. MATERIAL SHALL BE IDOT APPROVED GRADATION CA-6, GRADE 7, 8, OR 9.
3. PIPE BEDDING SHALL BE FRACTURED GRANULAR MATERIAL IDOT GRADATION CA-7 OR CA-11 FROM 4 INCHES BELOW HORIZONTAL CENTER OF PIPE.
4. UNSUITABLE MATERIAL TO BE REMOVED WHERE DIRECTED BY THE ENGINEER AND REPLACED WITH COMPACTED SUITABLE MATERIAL.
5. TRENCH WIDTH:
   PIPE O.D. + 12 INCHES MINIMUM
   PIPE I.D. + 18 INCHES MAXIMUM
6. CONTRACTORS SHALL COMPLY WITH THE LATEST OSHA STANDARDS INCLUDING, BUT NOT LIMITED TO:
   SLOPING AND BENCHING TRENCHING WALLS;
   TRENCH SUPPORT AND SHORING SYSTEMS;
   SHIELD SYSTEMS; AND
   HAZARDOUS ATMOSPHERES.

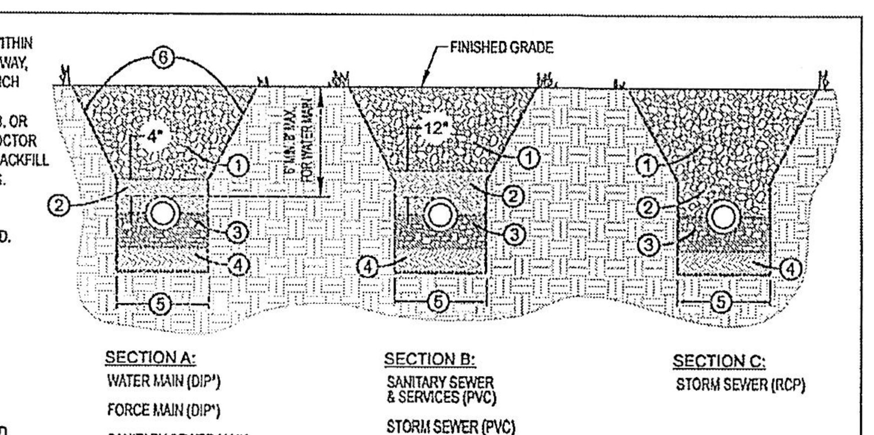

SECTION A:
WATER MAIN (DIP*)
FORCE MAIN (DIP*)
SANITARY SEWER MAIN & SERVICES (ESVCP,DIP*)

SECTION B:
SANITARY SEWER & SERVICES (PVC)
STORM SEWER (PVC)
SANITARY MAIN & WATER MAIN (HDPE)

SECTION C:
STORM SEWER (RCP)

* NOTE: ALL DUCTILE IRON SHALL BE SUBJECT TO POLY WRAP PER CITY ENGINEER

Approved: City Engineer
Victor C. Ramirez, P.E.
Director of Engineering and Building

Drawing Name: TYPICAL TRENCH CROSS SECTION

Drawing Number: UG-03
Date: 6/1/2007
Drawn: EM Checked: LZ

CRYSTAL LAKE ILLINOIS Engineering Division

L:\ENGINEERING AND BUILDING\ENGINEERING\DETAILS AND STANDARDS\

EC-02

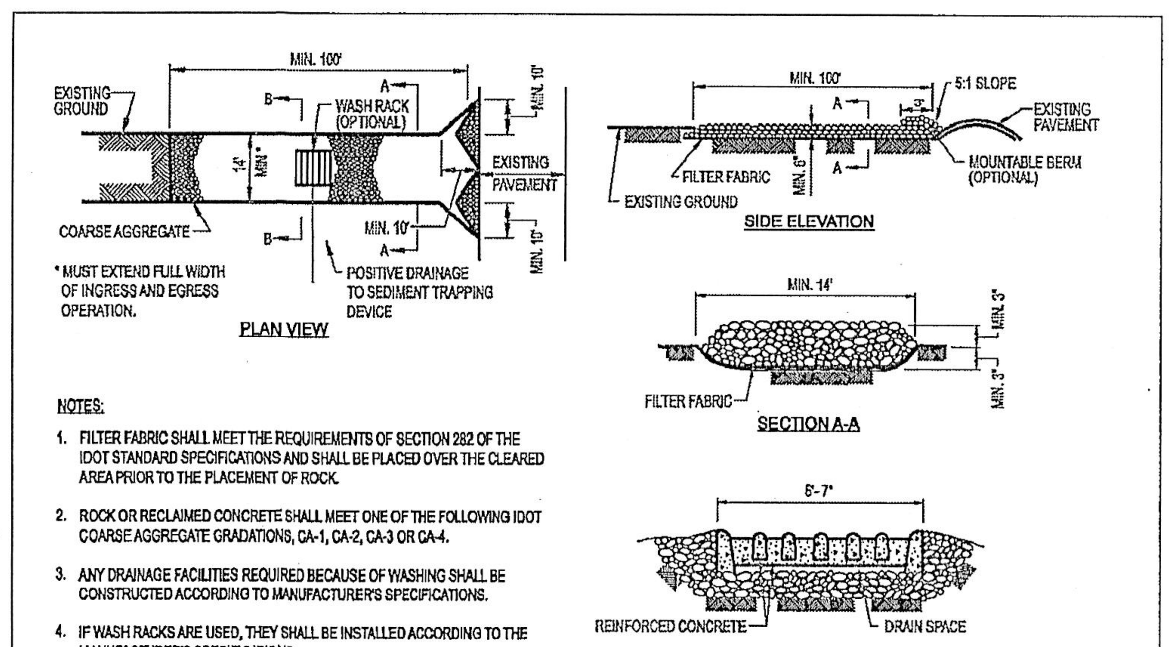

NOTES:

1. FILTER FABRIC SHALL MEET THE REQUIREMENTS OF SECTION 282 OF THE IDOT STANDARD SPECIFICATIONS AND SHALL BE PLACED OVER THE CLEARED AREA PRIOR TO THE PLACEMENT OF ROCK.
2. ROCK OR RECLAIMED CONCRETE SHALL MEET ONE OF THE FOLLOWING IDOT COARSE AGGREGATE GRADATIONS, CA-1, CA-2, CA-3 OR CA-4.
3. ANY DRAINAGE FACILITIES REQUIRED BECAUSE OF WASHING SHALL BE CONSTRUCTED ACCORDING TO MANUFACTURER'S SPECIFICATIONS.
4. IF WASH RACKS ARE USED, THEY SHALL BE INSTALLED ACCORDING TO THE MANUFACTURER'S SPECIFICATIONS.

Approved: City Engineer
Victor C. Ramirez, P.E.
Director of Engineering and Building

Drawing Name: CONSTRUCTION ENTRANCE

Drawing Number: EC-02
Date: 4/15/2007
Drawn: EM Checked: LZ

CRYSTAL LAKE ILLINOIS Engineering Division

L:\ENGINEERING AND BUILDING\ENGINEERING\DETAILS AND STANDARDS\

EC-03

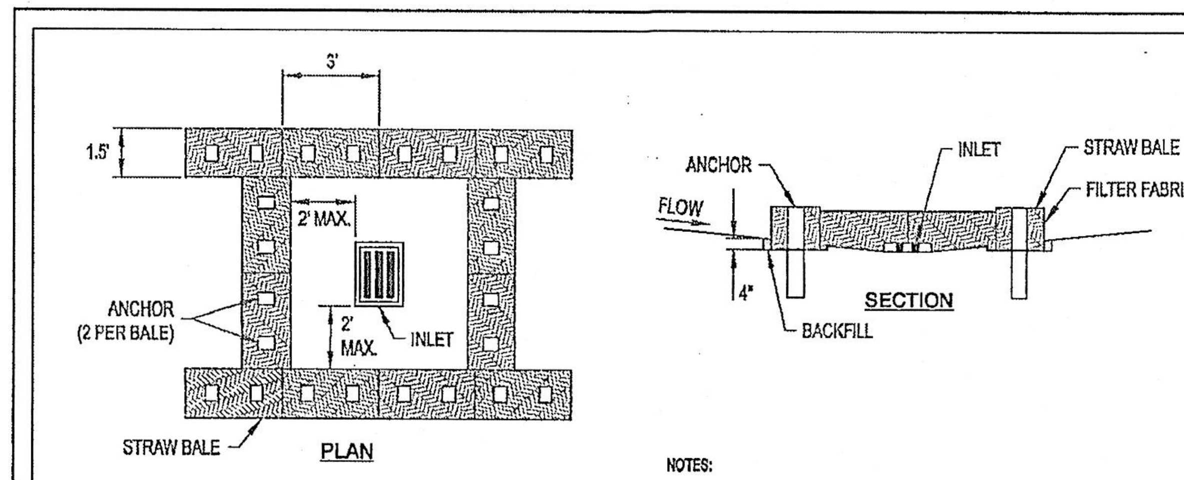

NOTES:

1. The immediate land area around the inlet should be relatively flat (less than 1% slope) and located so that the accumulated sediment can be easily removed.
2. The inside edge of the bales shall be a maximum of 2 feet from the edge of the inlet.
3. Filter fabric shall meet the requirements of IL Urban Manual material specification 592 GEOTEXTILE, Table 1 or 2, Class 1 with AOS of at least 30 for nonwoven and 50 for woven.
4. Anchors shall be rebar, steel pickets or 2" x 2" stakes, and shall be long enough to extend at least 1.5 to 2.0 feet into the ground when the top is flush with the bale.
5. Straw bales must be wrapped with string around the sides of the bale, not on the bottom (to prevent string from rotting).

Approved: City Engineer
Victor C. Ramirez, P.E.
Director of Engineering and Building

Drawing Name: INLET PROTECTION STRAW BALE BARRIER

Drawing Number: EC-03
Date: 4/15/2007
Drawn: EM Checked: LZ

CRYSTAL LAKE ILLINOIS Engineering Division

L:\ENGINEERING AND BUILDING\ENGINEERING\DETAILS AND STANDARDS\

EC-04

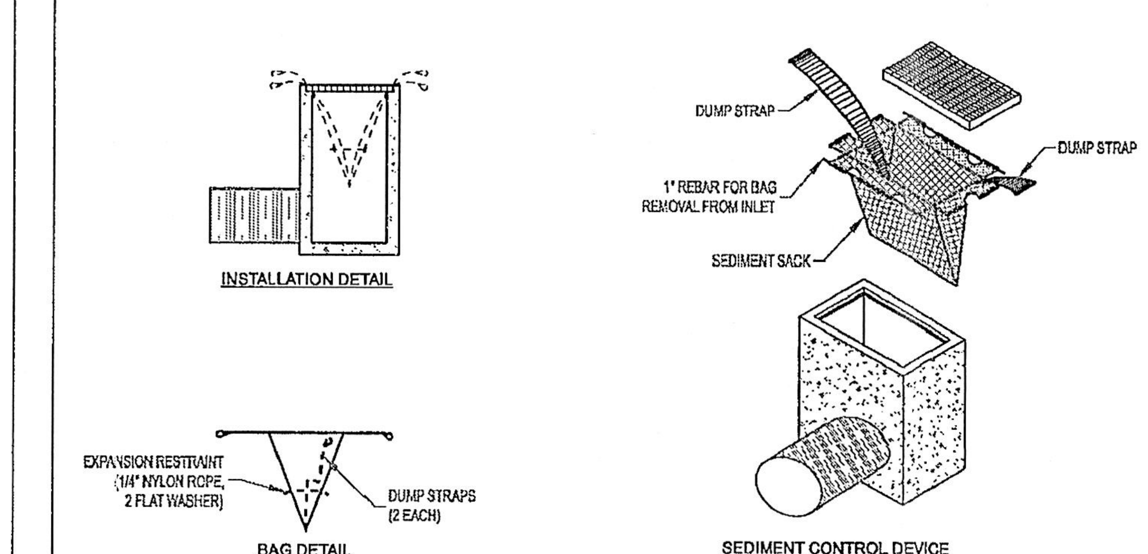

Approved: City Engineer
Victor C. Ramirez, P.E.
Director of Engineering and Building

Drawing Name: INLET SEDIMENT CONTROL DEVICE

Drawing Number: EC-04
Date: 4/15/2007
Drawn: EM Checked: LZ

CRYSTAL LAKE ILLINOIS Engineering Division

L:\ENGINEERING AND BUILDING\ENGINEERING\DETAILS AND STANDARDS\

No.	Description	Date
3	CITY COMMENTS	02/01/08
2	CITY COMMENTS	12/07/07
1	CITY COMMENTS	10/25/07
	NO REVISION	09/07/07
	ISSUED FOR PERMIT	08/28/07

CITY DETAILS

AL & JOE'S RESTAURANT
PARTNERS IN DESIGN
CRYSTAL LAKE, IL

JACOB & HEFNER ASSOCIATES, INC.
ENGINEERS • SURVEYORS
1901 S. MEYERS ROAD, SUITE 350
OAKBROOK TERRACE, IL. 60181
PHONE: (630) 652-4600
FAX: (630) 652-4601

N.T.S.

D605f

C5.1

H:\D\D605\D605f\E\DWG\FINAL\D605f-Sheets.dwg